R.W. HOLLAND

STANDARD & CUSTOM HAIRPIN HEAT EXCHANGERS

Serving the petroleum, petrochemical, chemical and power industries.

Bulletin 30

Tank Heating Coils

Serving the petroleum, petrochemical, chemical and power industries.

Bulletin 30

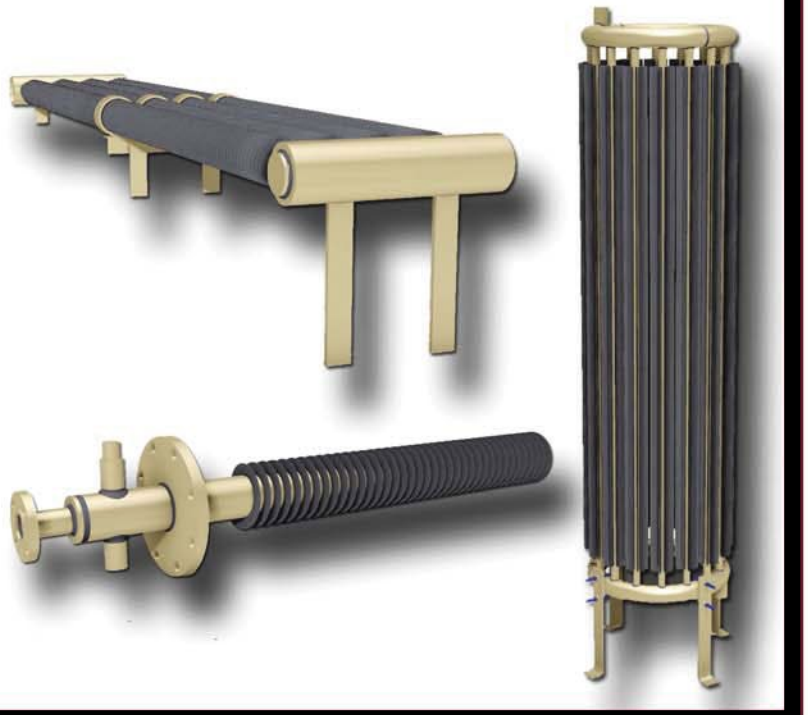

E-Mail: sales@rwholland.com **Website: www.rwholland.com**

P.O. Box 472336 **Tulsa, Oklahoma 74147-2336** **(918) 664-7822**

5004 South 101st East Avenue **Tulsa, Oklahoma 74146-4919** **Fax: (918) 665-1605**

TANK HEATING COILS FOR ALL APPLICATIONS

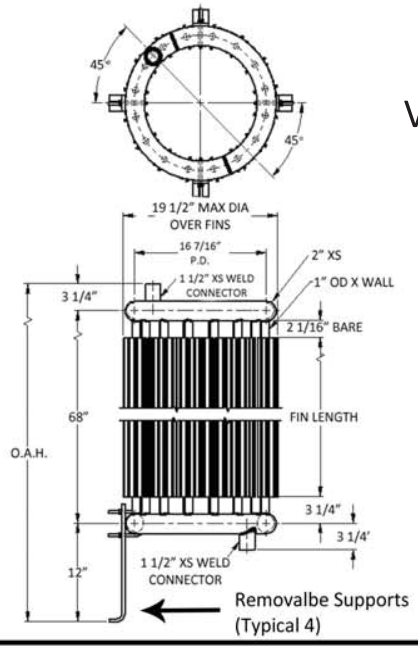

VERTICAL COILS

- Vertical dessign gives the best thermosyphon flow in tank and most efficient heat transfer
- Off-floor design allows for easier cleaning of tank

Type	CV 16-62
Tubes No. - Size	16 - 1" O.D. x 12Ga.
Fins - Long. Type	1" High x .035" Thk. X 20/tube
Fin Length - In.	62"
Heating Surface	300 ft²
Overall Ht.	6' - 11 3/4"
WT.	420 lbs.

BAYONET COILS (HORIZONTAL)

- Direct connection to tank mounting flange
- All connections outside tank
- Helical fintube oriented in direction of thermosyphon

Type	BH3-120	BH3-240	BH4-120	BH4-240
Tube	3" IPS SCH. 40		4" IPS SCH. 40	
Fins - Helical Type	1" High x .050" Thk. X 5/in			
Fin Lgth. - In.	120"	240"	120"	240"
Heating Surface	129 ft²	258 ft²	157 ft²	314 ft²
Overall Lgth. (O.A.L)	11'-10 1/16"	20'-10 1/16"	11'-11 1/16"	21'-111/16"
Projection Inside Tank	10'-10"	20'-10"	10'-11"	20'-11"
Tank Mt. Flg. Size - Rating	6" -150#	6" -150#	8" -150#	8" -150#
Inlet Fig. Size - Rating	1 ½" -150#	1 ½" -150#	2" -150#	2" -150#
WT.	285 lbs	530 lbs	350 lbs	600 lbs

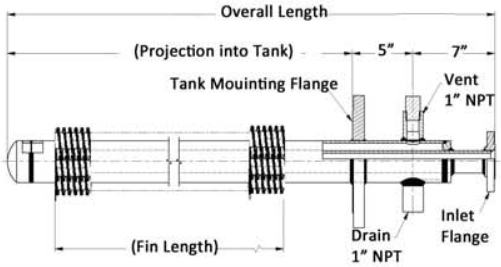

HORIZONTAL COILS FOR TANKS WITH LOW LIQUID LEVELS

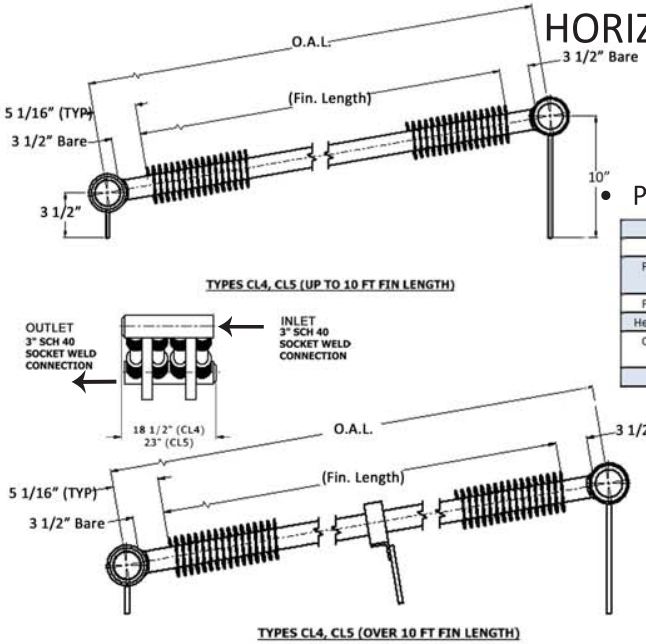

- Parallel Flow for Steam Heating

Type	CL4-120	CL4-240	CL5-120	CL5-240
Tube	4-2" IPS SCH. 40		5-2" IPS SCH. 40	
Fins - Helical Type	3/4" High x .050" Thk. X 5/in			
Fin Lgth. - In.	120"	240"	120"	240"
Heating Surface	275 ft²	550 ft²	344 ft²	688 ft²
Overall Lgth. (O.A.L)	11'-1 9/16"	21'-1 9/16"	11'-1 9/16"	21'-1 9/16"
WT.	595 LBS	995 LBS	740 LBS	1240 LBS

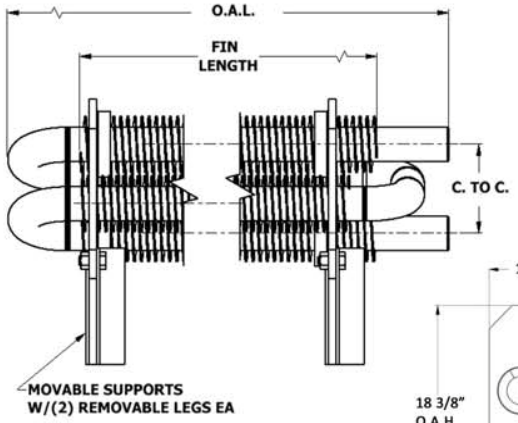

- Series Flow for Hot Oil/ Heat transfer Fluid Heating
- Fits thru a 23" I.D. Manway

Type	CS4-120	CS4-240	CS6-120	CS6-240
Tube	4-2" IPS SCH. 40		5-2" IPS SCH. 40	
Fins - Helical Type	3/4" High x .050" Thk. X 5/in			
Fin Lgth. - In.	120"	240"	120"	240"
Heating Surface	275 ft²	550 ft²	344 ft²	688 ft²
Overall Lgth. (O.A.L)	11'-1 9/16"	21'-1 9/16"	11'-1 9/16"	21'-1 9/16"
WT.	595 LBS	995 LBS	740 LBS	1240 LBS
C to C	6 1/8"		10 1/4"	

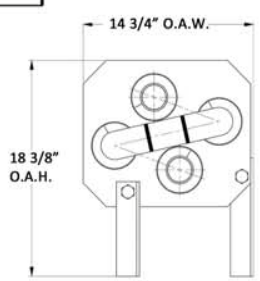

Type CS4

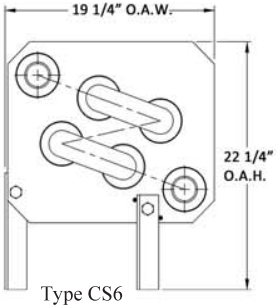

Type CS6

NOTE: ABOVE COILS ARE STANDARDS
Heavier tube walls are available on all coils. Lengths of coils can be varied to suit requirements. Helical finned coils are available with varied fin combinations. Fin thickness is available from .035" thru 0.134" thick and ir density rnges from 2 f.p.i to 6 f.p.i. depending on thickness.